Notes :

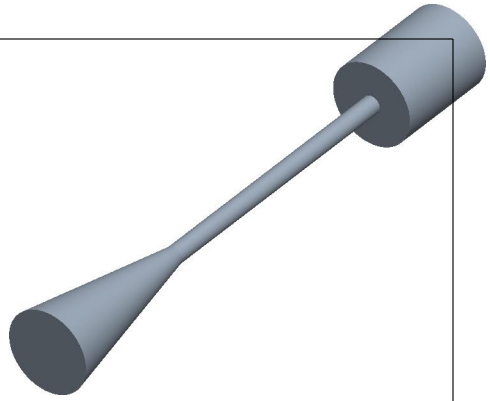

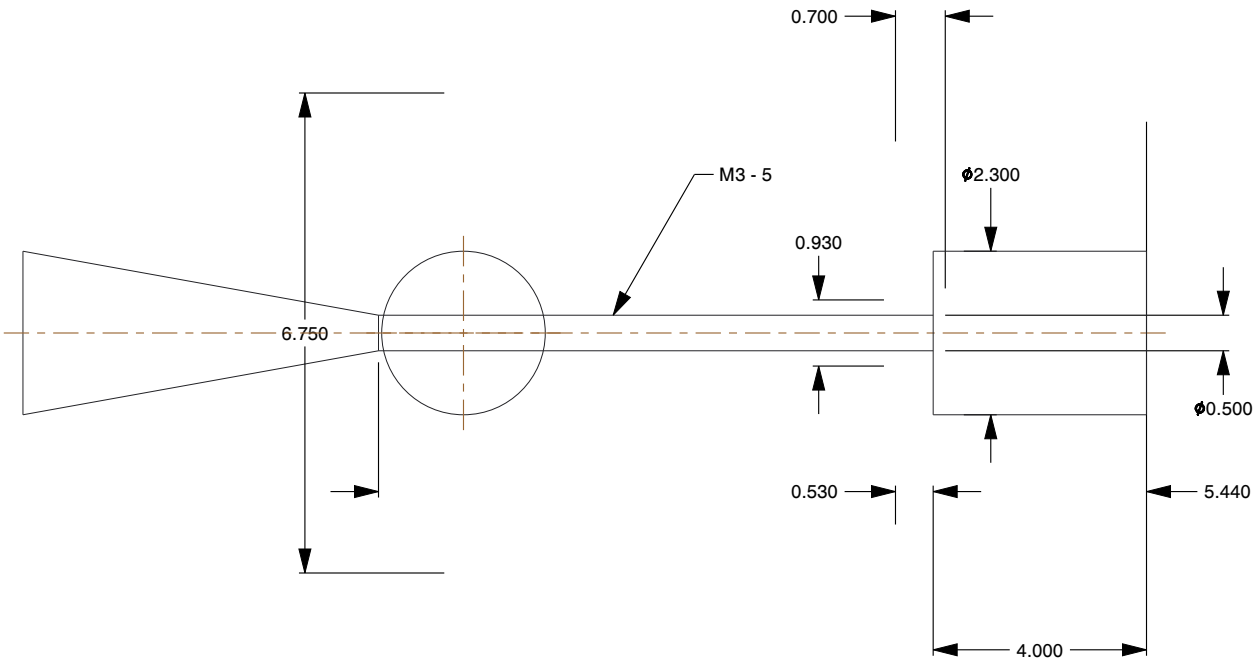

	This file and any associated information and specifications are provided for reference and evaluation purposes only and is subject to change without notice. _____ makes no representations, warranties, or guarantees as to the appropriateness, accuracy, completeness, or suitability for any purpose of the file, information or specifications. You are solely responsible for the use of the file, information, or specifications.	This document is the property of _____. and the information it contains may not be reproduced, disclosed, or shared with any third party without the expressed written permission of _____.	PRODUCT NAME	UNIT
				ISSUED 2026-03-17
		SCALE 9.407	PART NUMBER:	SHEET 1 of 1